Appendix M

Wood Decks

(Entire section is a NC amended appendix)

Section AM101
General

AM101.1 General. A deck is an exposed exterior wood floor structure which may be attached to the structure or freestanding. Roofed porches (open or screened-in) may be constructed using these provisions.

AM101.2 Deck design. Computer deck design programs may be accepted by the Code Enforcement Official.

Section AM102
Footers

AM102.1 Footers. Support post shall be supported by a minimum footing per Figure AM102 and Table AM102.1 Minimum footing depth shall be 12" below finished grade per R403.1.4. Tributary area is calculated per Figure AM102.1.

Section AM103
Flashing

AM103.1 Flashing. When attached to a structure, the structure to which attached shall have a treated wood band for the length of the deck, or corrosion-resistant flashing shall be used to prevent moisture from coming in contact with the untreated framing of the structure. Aluminum flashing shall not be used in conjunction with deck construction. The deck band and the structure band shall be constructed in contact with each other except on brick veneer structures and where plywood sheathing is required and properly flashed ~~(when plywood is required, use pressure preservatively treated plywood).~~ Siding shall not be installed between the structure and the deck band. If attached to a brick structure, neither flashing nor a treated band for the brick structure is required. In addition, the treated deck band shall be constructed in contact with the brick veneer. Flashing shall be installed per Figure AM103.

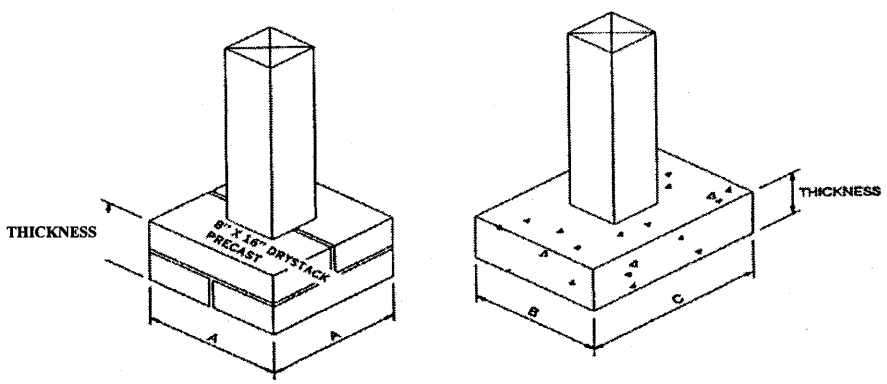

Figure AM102

Table AM102.1

Footing table [a, b, c]

Size (inches)		Tributary Area	Thickness (inches)	
A x A	B x C	(Sq. Ft.)	Precast	Cast-in-place
8 x 16	8 x 16	36	4"	6"
12 x 12	12 x 12	40	4"	6"
16 x 16	16 x 16	70	8"	8"
----	16 x 24	100	--	8"
	24 x 24	150	--	8"

a. Footing values are based on single floor and roof loads
b. Support post must rest in center 1/3 of footer
c. Top of footer shall be level for full bearing support of post

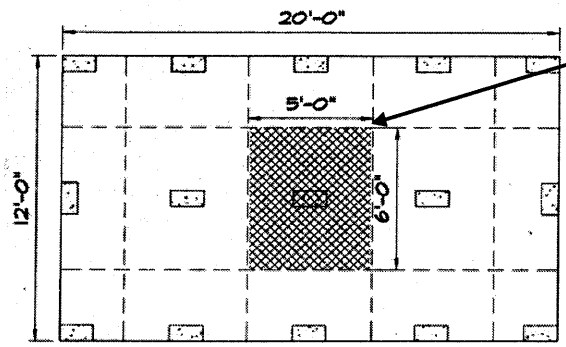

Tributary area of shaded section on free standing deck shown is 5'x6'=30 sq. ft. Code will require a minimum footer of 8"x 16" per Table AM102.1

Figure AM102.1

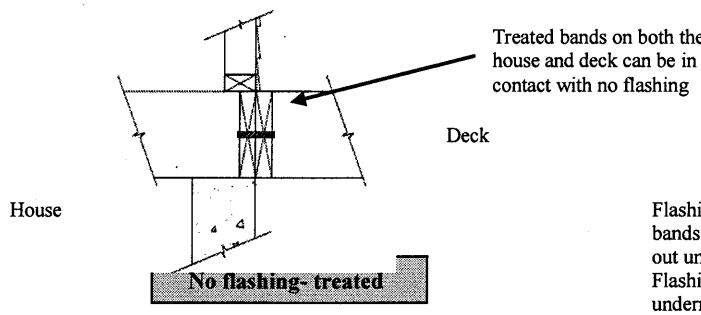

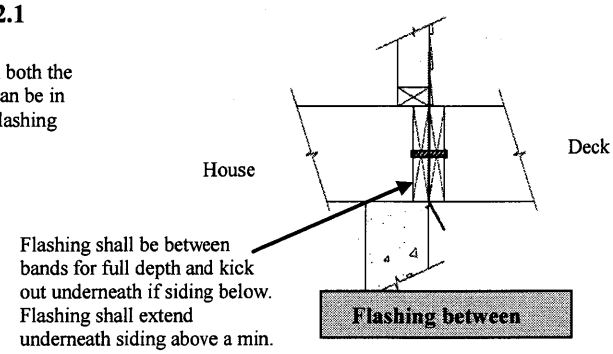

Figure AM1(

Section AM104
Deck attachment

AM104.1 Deck Attachment. When a deck is supported at the structure by attaching the deck to the structure, the following attachment schedules shall apply for attaching the deck band to the structure.

AM104.1.1 All Structures Except Brick veneer Structures:

Fasteners	8' Max Joist Span [a]	16' Max Joist Span [a]
5/8" Hot Dipped Galv. Bolts with nut and washer [b]	1 @ 3'-6" o.c.	~~1 @ 1'-8" o.c.~~ **1 @ 2'-8" o.c.**
and	**and**	**and**
12d Common Hot Dipped Galv. Nails [c]	2 @ 8" o.c.	~~3 @ 6" o.c.~~ **3 @ 16" oc**

a. Attachment interpolation between 8'&16' joists span are allowed
b. Minimum edge distance for bolts is 2 ½ inches
c. Nails must penetrate the supporting structure band a minimum of 1 ½ inches

AM104.1.2 Brick Veneer Structures

Fasteners	8' Max Joist Span [a]	16' Max joist Span [a]
5/8" Hot Dipped Galv. Bolts with Nut and Washer [b]	1@ 2'-4" o.c.	1@ 1'-4"o.c.

a. Attachment interpolation between 8'&16' is allowed
b. Minimum edge distance for bolts is 2 ½ inches

AM104.1.3 Masonry Ledge Support

If the deck band is supported by a minimum of ½ inch masonry ledge along the foundation wall, 5/8 inch hot dipped galvanized bolts with washers spaced at 48 inches o.c. may be used for support.

AM104.1.4 Other means of support

Joist hangers or other means of attachment may be connected to house band and shall be properly flashed

Section AM105

AM105.1 Girder Support & Span. Girders shall bear directly on support post with post attached at top to prevent lateral displacement or be connected to the side of posts with two 5/8 inch hot dipped galvanized bolts with nut and washer. Girder spans are per Table R502.5 (1&2). Girder support may be installed per Figure AM105 for top mount; Figure AM105.1 for side mount and Figure AM105.2 for split girder detail. Girders may also be cantilevered off ends of support post no more than 1 joist spacing or 16" whichever is greater per Figure AM105.3.

Section AM106

M106.1 Joist Spans & Cantilevers. Joists spans shall be based upon Table R502.3.1(2) with 40 lbs per sq. ft. live load and 10 lbs per sq. ft. dead load. Floor joists for exterior decks may be cantilevered per Table R502.3.3 (1).

Spacing	2x6	2x8	2x10	2x12
12"	10-9	14-2	18-0	21-9
16"	9-9	12-10	16-1	18-10
19.2"	9-2	12-1	14-8	17-2
24"	8-6	11-0	13-1	15-5

Partial reprint of Table R502.3.1(2), #2 SYP only joist spans

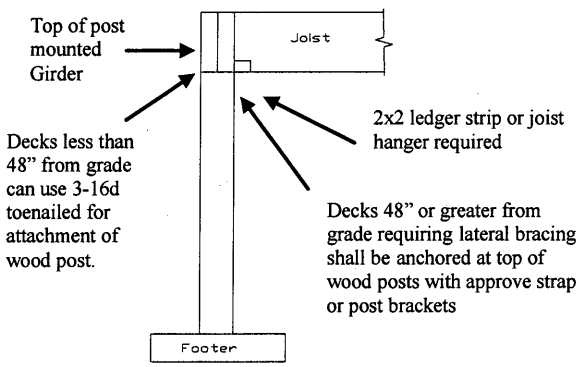

Top mount/flush

Figure AM105

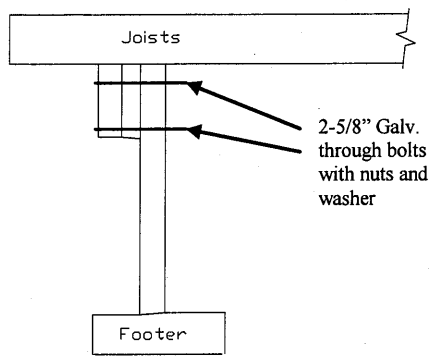

Side mount dropped girder

Figure AM105.1

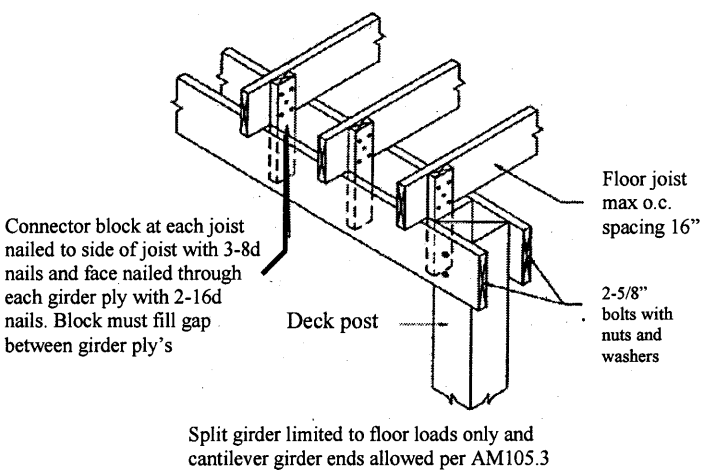

Split girder detail

Figure AM105.2

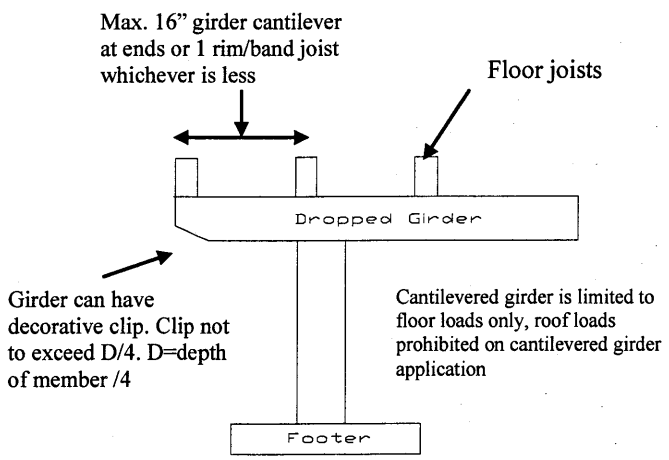

Cantilevered dropped girder detail

Figure AM105.3

Section AM107

AM107.1 Floor Decking. Floor decking shall be No. 2 grade treated Southern Pine or equivalent. The minimum floor decking thickness shall be as follows:

Joist Spacing	Decking (nominal)
12" o.c.	1" S4S
16" o.c.	1" T&G
19.2 o.c.	1-1/4" S4S
24"-36" o.c.	2" S4S

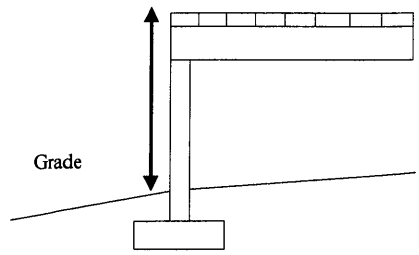

Less than 4' (decking to grade) and attached to structure no bracing required

Figure AM109

Section AM108

AM108.1 Post height. Maximum height of Deck support posts as follows:

Post size [a]	Max. Post Height [b,c]
4x4	8'-0"
6x6	20'-0"

a. This table is based on No. 2 Southern Pine posts.
b. From top of footing to bottom of girder
c. Decks with post heights exceeding these requirements shall be designed by a registered design professional

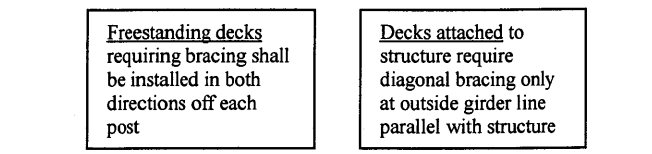

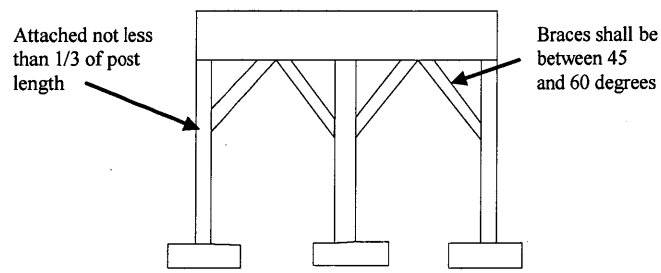

Figure AM109.1

Section AM109

AM109.1 Deck bracing. Decks shall be braced to provide lateral stability. The following are acceptable means to provide lateral stability.

AM109.1.1. When the deck floor height is less than 4'-0" above finished grade per Figure AM109 and the deck is attached to the structure in accordance with Section AM104, lateral bracing is not required.

AM109.1.2. 4x4 wood knee braces may be provided on each column in both directions. The knee braces shall attach to each post at a point not less than 1/3 of the post length from the top of the post, and the braces shall be angled between 45 degrees and 60 degrees from the horizontal. Knee braces shall be bolted to the post and the girder/**double band** with one 5/8 inch hot dipped galvanized bolt nut and washer at both ends of the brace per Figure AM109.1

AM109.1.3. For freestanding decks without knee braces or diagonal bracing, lateral stability may be provided by embedding the post in accordance with Figure AM109.2 and the following:

Post size	Max. Tributary Area	Max. Post Height	Embedment Depth	Concrete Diameter
4x4	48 SF	4'-0"	2'-6"	1'-0"
6x6	120 SF	6'-0"	3'-6"	1'-8"

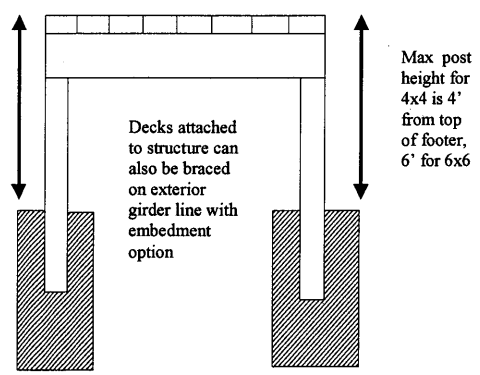

Figure AM109.2

AM109.1.4 2x6 diagonal vertical cross bracing may be provided in two perpendicular directions for freestanding decks or parallel to the structure at the exterior column line for attached decks. The 2x6's shall be attached to the posts with one 5/8 inch hot dipped galvanized bolt with nut and washer at each end of each bracing member per Figure AM109.3.

AM109.1.5 For embedment of piles in Coastal Regions, see Chapter 45.

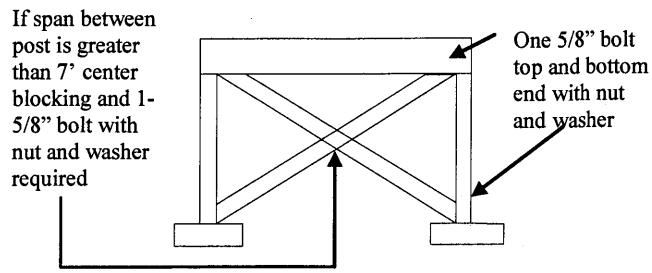

Figure AM109.3

Section AM110

AM110.1 Stairs shall be constructed per Figure AM110. Stringer spans shall be no greater than 7' span between supports. Spacing between stringers shall be based upon decking material used per AM107.1. Each Stringer shall have minimum 3 ½" between step cut and back of stringer. ~~All stringers supported at top on~~ Suspended headers that support stringers at the top shall be attached with 3/8" Galv bolts with nuts and washers.

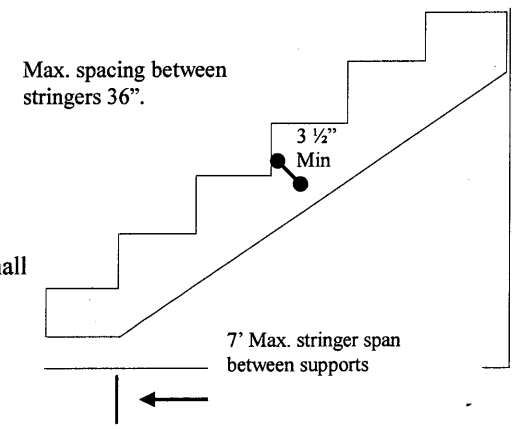

Figure AM110

Section AM111

AM111.1 Handrails, Guards and General. Deck handrails, guards and general construction shall be per Figure AM111.

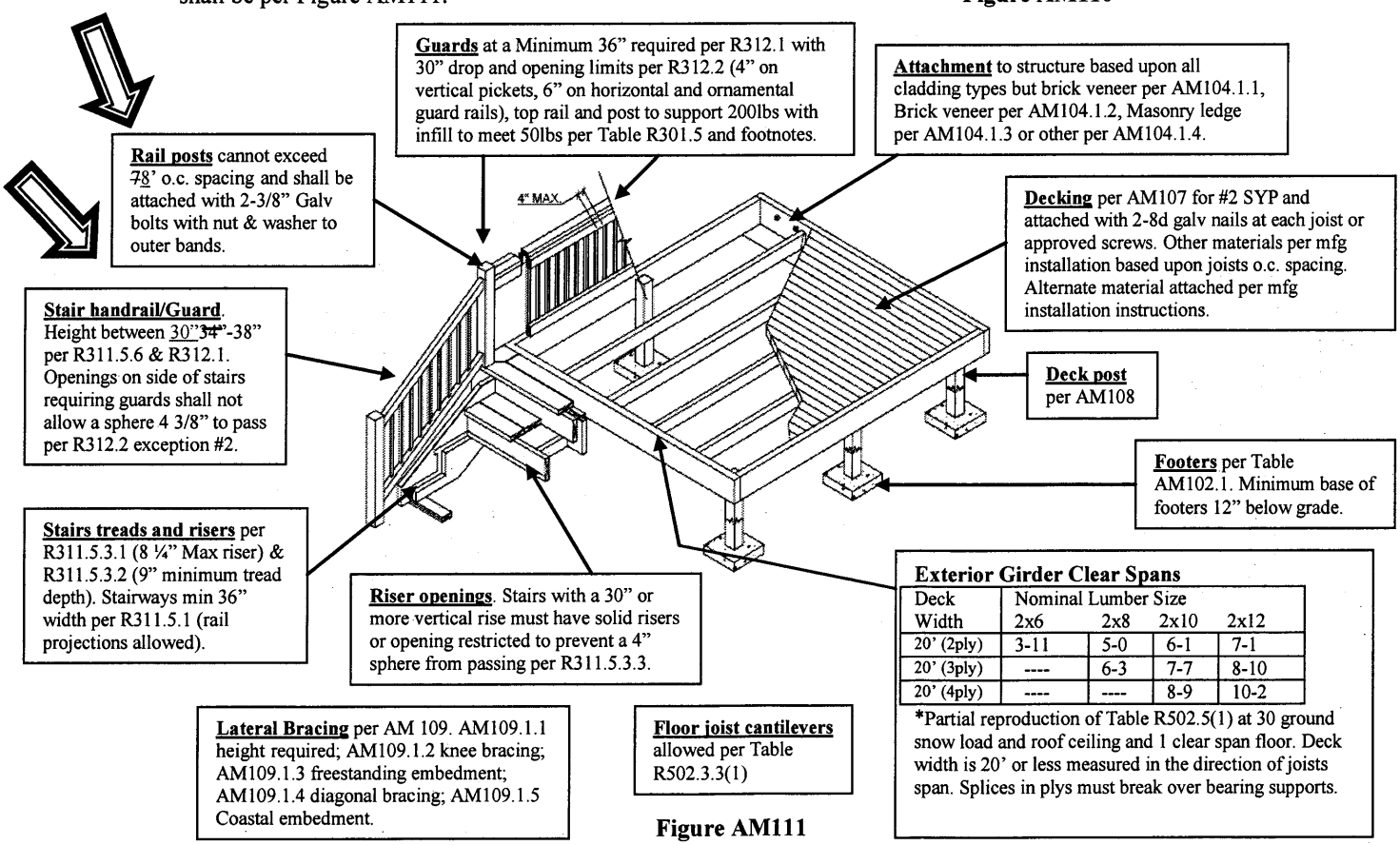

Exterior Girder Clear Spans

Deck Width	Nominal Lumber Size 2x6	2x8	2x10	2x12
20' (2ply)	3-11	5-0	6-1	7-1
20' (3ply)	----	6-3	7-7	8-10
20' (4ply)	----	----	8-9	10-2

*Partial reproduction of Table R502.5(1) at 30 ground snow load and roof ceiling and 1 clear span floor. Deck width is 20' or less measured in the direction of joists span. Splices in plys must break over bearing supports.

Figure AM111